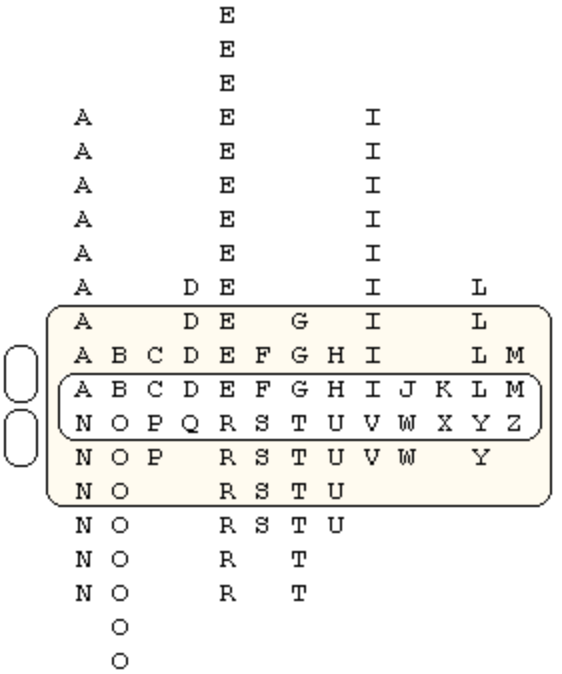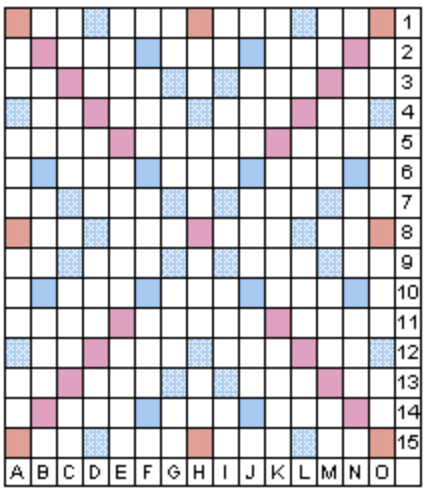PLAYER 1			PLAYER 2	
RACK	WORD PLAYED	SCORE	WORD PLAYED	SCORE
		+		+
		+		+
		+		+
		+		+
		+		+
		+		+
		+		+
		+		+
		+		+
		+		+
		+		+
		+		+
		+		+
		+		+
		+		+
		+		+
		+		+
		+		+
		+		+
Overtime Penalty:			Overtime Penalty:	
Tiles Penalty:			Tiles Penalty:	
Final Score:			Final Score: